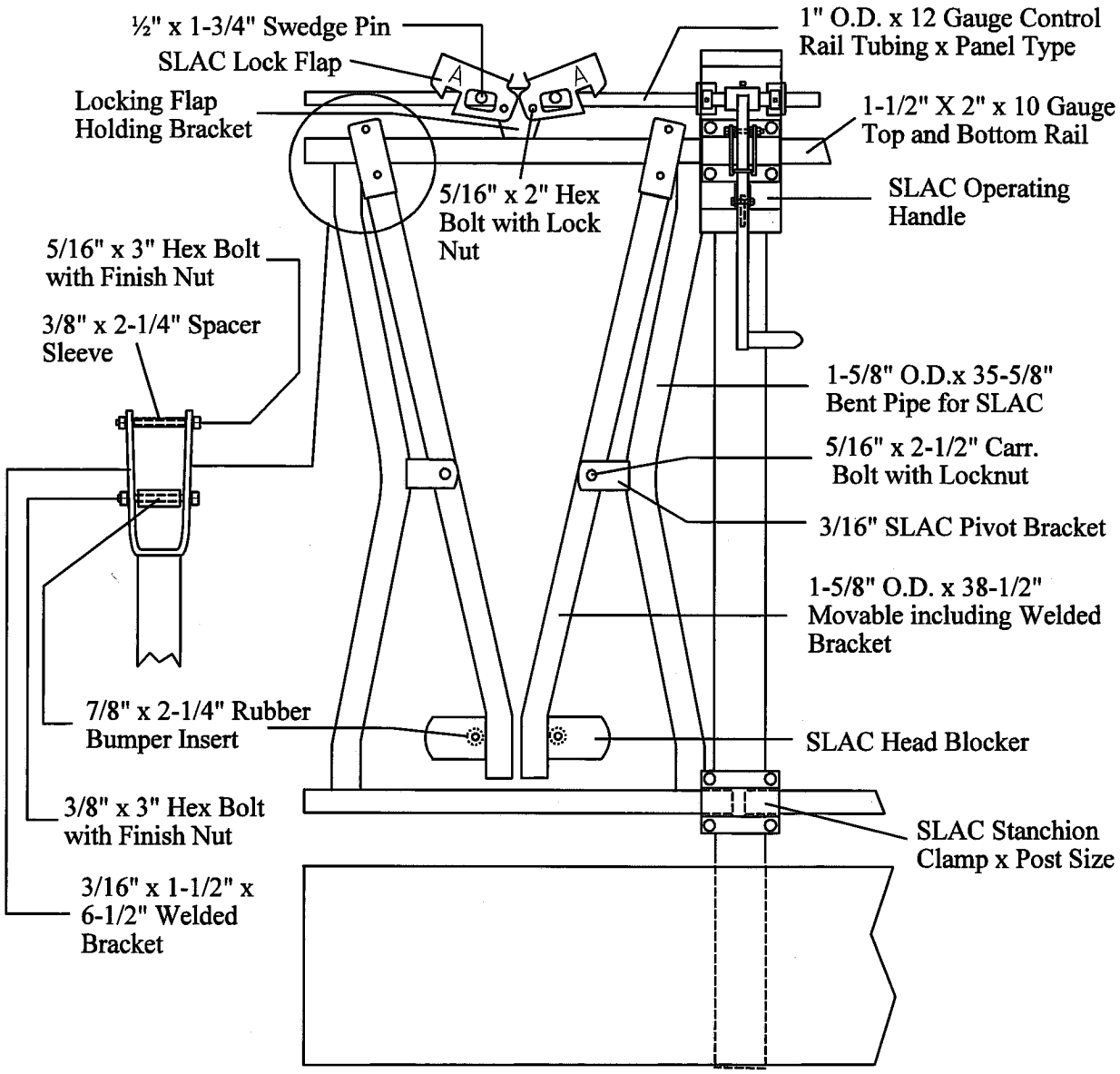"SLAC" HEADLOCK PARTS GUIDE